DWG. NO.	SH	REV
		1

REVISIONS

ZONE	REV	ECO NO.	DESCRIPTION	DATE	APPROVED
	C	3013	PRODTION RELEASE UPDATED TO INCLUDE REV B CHANGES.	11-92	

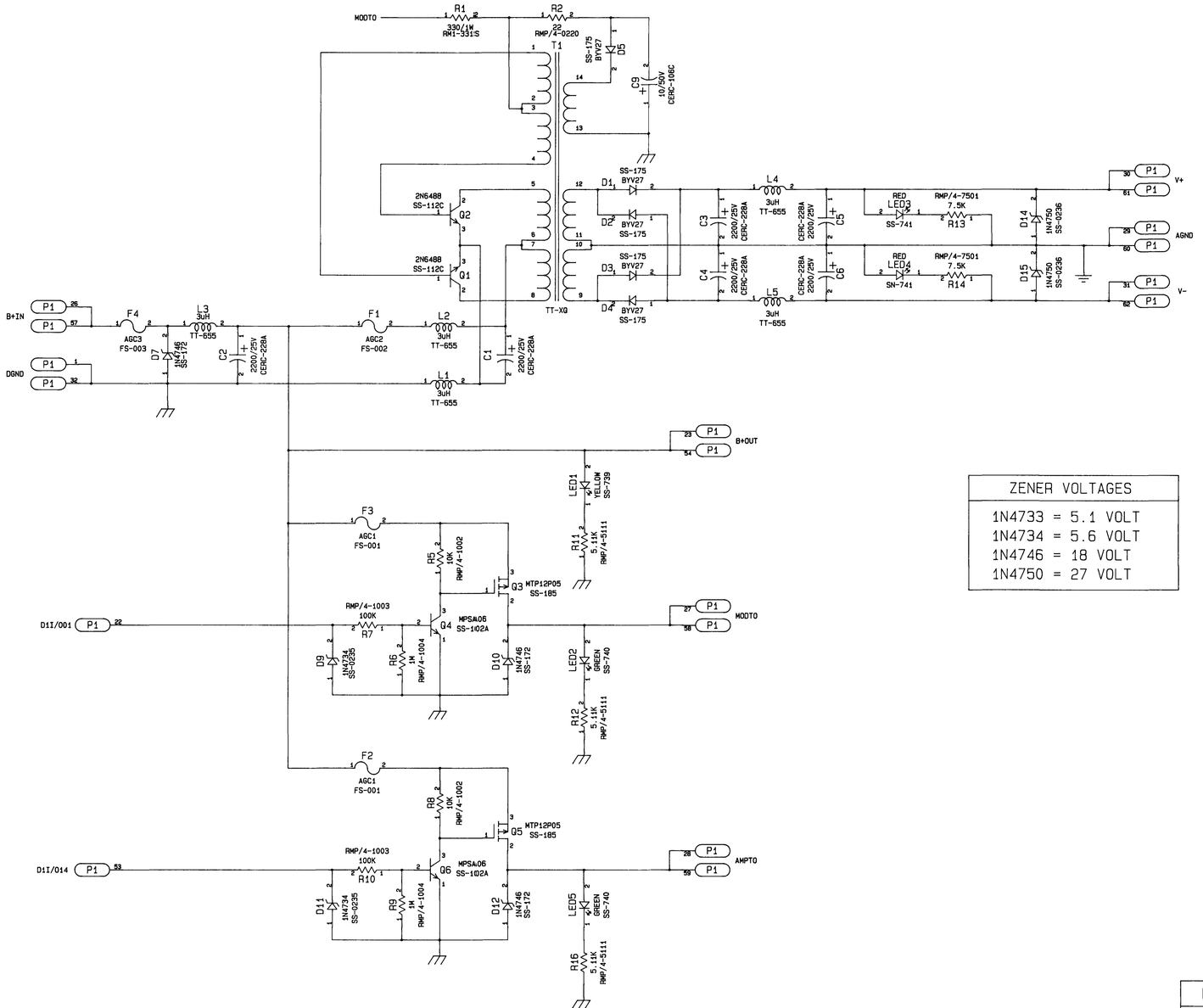

ZENER VOLTAGES
1N4733 = 5.1 VOLT
1N4734 = 5.6 VOLT
1N4746 = 18 VOLT
1N4750 = 27 VOLT

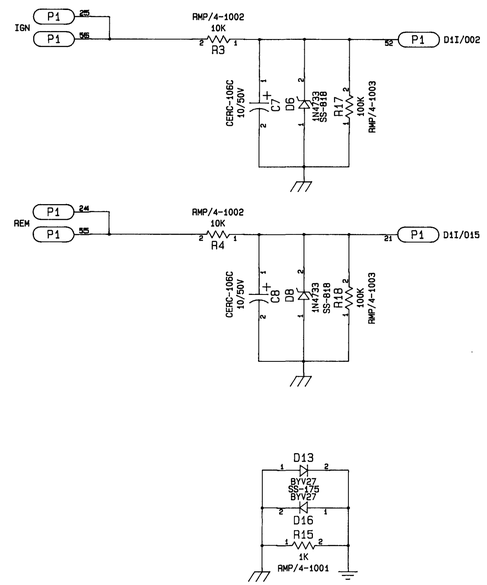

CONFIDENTIAL

© Copyright 19 93 Rockford Corporation. This drawing is the property of Rockford Corporation and embodies confidential information, trade secret information, and/or know-how which is the property of Rockford Corporation. By accepting this drawing, the recipient agrees not to provide, or otherwise make available, the drawing, or any information or know-how embodied therein, to any third party without prior written authorization.

LAST USED LIST					
		DO NOT SCALE DRAWING			

APPROVALS	DATE
DRAWN WAYNE HARRIS	1/29/91
CHECKED	
FINISH	

TITLE
SYMMETRY POWER SUPPLY MODULE

SYMMETRY

SIZE	DWG NO.	REV
D	SCH-401	C
SCALE		SHEET